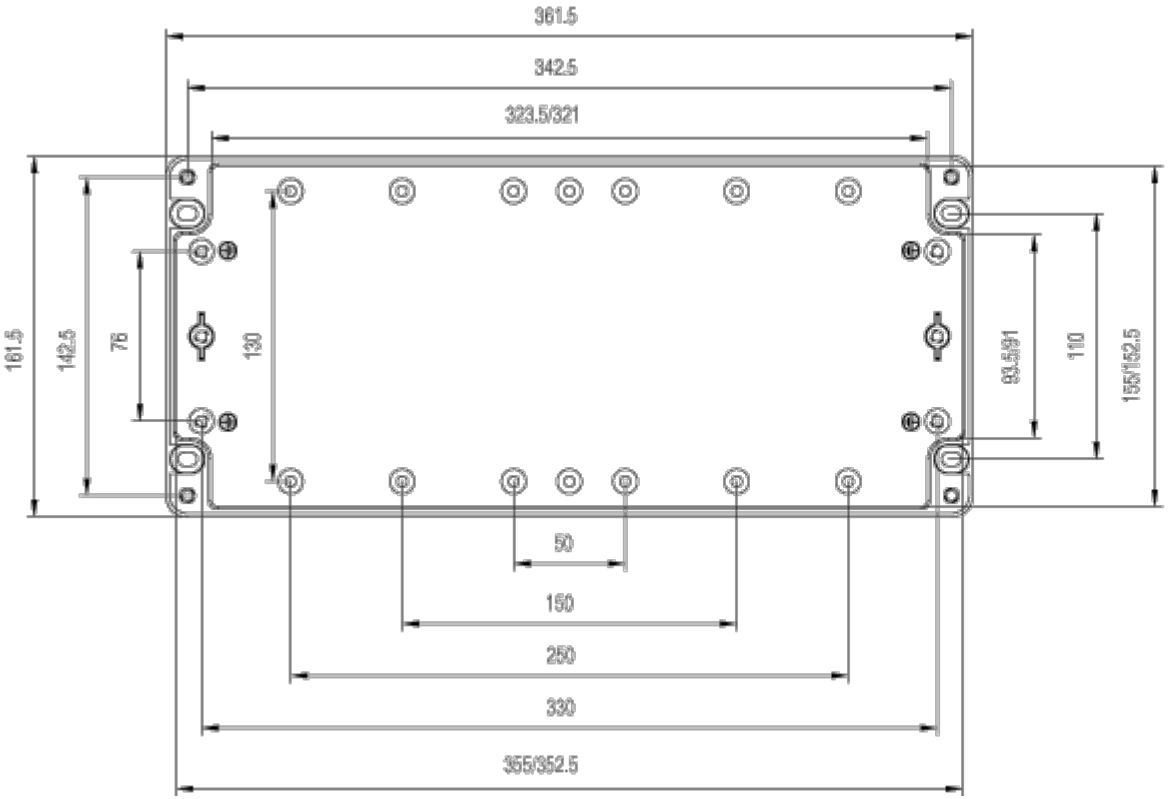
361.5
342.5
323.5/321
161.5
142.5
76
130
93.5/91
110
155/152.5
50
150
250
330
355/352.5

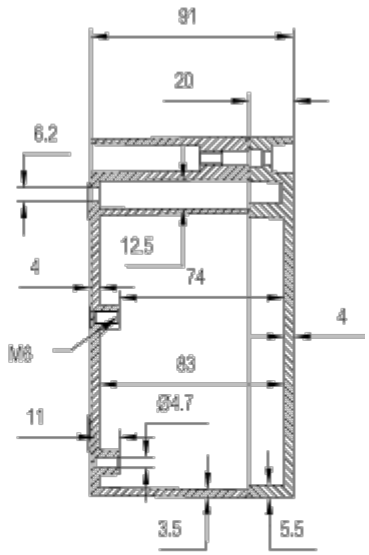
91
20
6.2
12.5
4
74
4
M8
83
Ø4.7
11
3.5
5.5